REV	ECN #	DESCRIPTION	DRAWING	APPROVED	DATE
A		NEW RELEASE	DEYI		2014/09/13

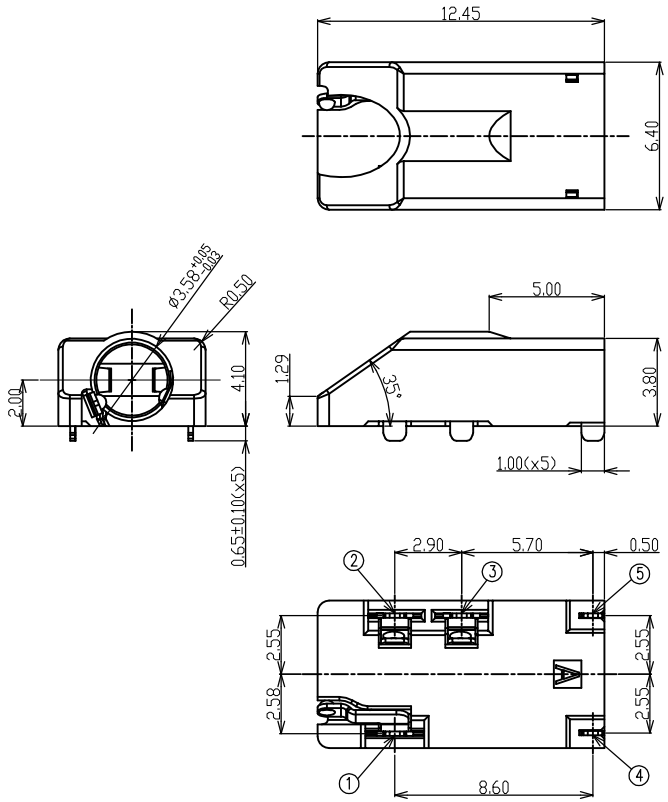

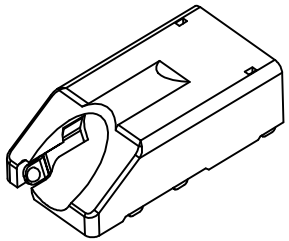

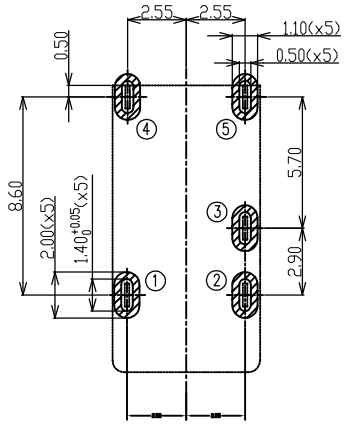

RECOMMENDED PCB LAYOUT

TOLERANCES ±0.05(TOP VIEW)

NOTES :

1.0) RATING :
- 1.1. VOLTAGE : 12 VDC (R.M.S.)
- 1.2. CURRENT : 1 AMPERE MAXIMUM PER CONTACT AT 30°C T-RISE
- 1.3. TEMPERATURE : -25°C TO +85°C

2.0) ELECTRICAL CHARACTERISTIC
- 2.1. CONTACT RESISTANCE : INITIAL 50m次 MAX. AFTER 100m
- 2.2. INSULATION RESISTANCE : 100 M次 MIN.
- 2.3. DIELECTIC WITHSTANDING VOLTAGE : 500 VAC AT SEA LEVEL

3.0) MECHANICAL :
- 3.1. DURABILITY ,MINIMUN: MATED 5000 CYCLES WITHOUT DEGRADING ELECTRICAL
- 3.2. INITIAL:MATING FORCE: 300g~2000g.UNMATING FORCE: 300g~2000g
- 3.3. AFTER LIFE TESTING:MATING FORCE: 300g~2000g.UNMATING FORCE: 300g~2000g

TABLE A:

ITEM	NAME	Q'TY	MATERIAL / FINISH
6	HOUSING	1	HIGH TEMPERATURE UL 94-V0 BLACK
5	CONTACT 5	1	COPPER ALLOY/CONTACT AREA GOLD PLATED
4	CONTACT 4	1	COPPER ALLOY/CONTACT AREA GOLD PLATED
3	CONTACT 3	1	COPPER ALLOY/CONTACT AREA GOLD PLATED
2	CONTACT 2	1	COPPER ALLOY/CONTACT AREA GOLD PLATED
1	CONTACT 1	1	COPPER ALLOY/CONTACT AREA GOLD PLATED

PRODUCT NO.

PJ33-05 A B 03-00
① ② ③ ④

① PRODUCT SERIES:
PJ33: PHONE JACK CONNECTOR

② PIN NO.:
05: 5PIN

③ MATERIAL:
A: PA-9T

④ SERIES NO.:
00:

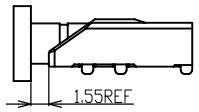

PLUG MATED DIMENSION

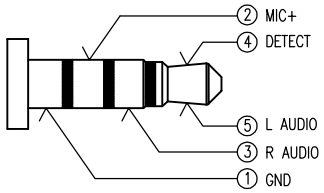

电原理图

CUSTOMER DRAWING	YTCONN	Dongguan YTCONN Electronics Technology Co., Ltd.	
GENERAL TOLERANCE X. .X ±0.20 .XX ±0.15 .XXX ±0.10	DRAWING	DEYI	TITLE: 3.8H斜口板上型耳机座
	APPROVED		P/N: PJ33-05AB03-00
ANGEL TOLERANCE X. ±3° .XX ±2° .XXX ±1°	DATE	2014.12.25	DRAWING NO. C-PJ33-00
	UNIT mm	SCALE 1:1	SIZE A4 SHEET 1of1 REV A