REV	ECN #	DESCRIPTION	DRAWING	APPROVED	DATE
A		NEW RELEASE	DEYI		2012/8/24

Pb Process Capable — RoHS Compliant 2002/95/EC

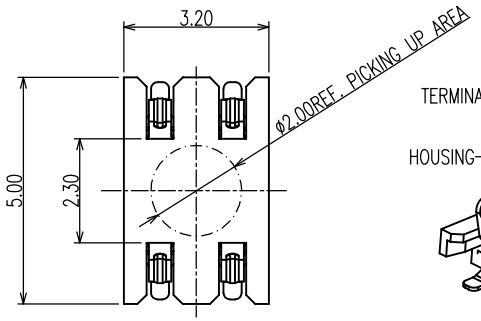

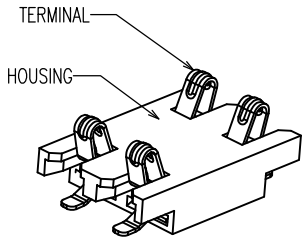

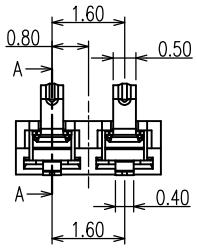

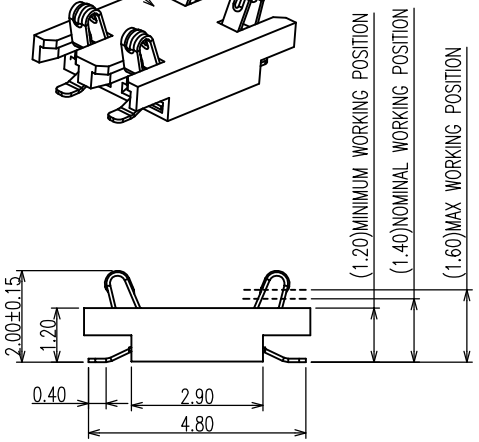

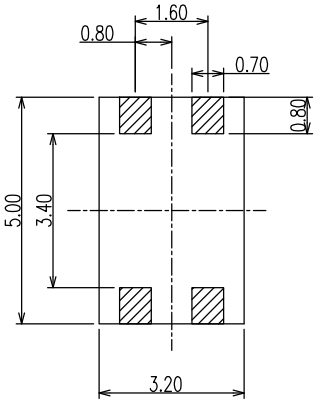

RECOMMENDED PCB LAYOUT

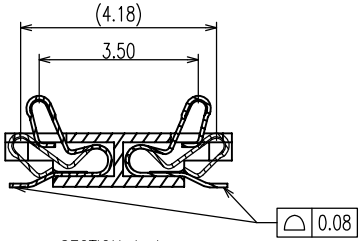

SECTION A-A

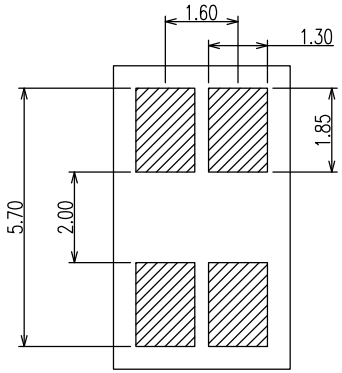

RECOMMENDED MATING PAD LAYOUT

NOTES:

1. MATERIAL:
   - 1.1 Housing:High Temperature Thermoplastic UL94V-0; Color Black.
   - 1.2 Terminal:Copper Alloy.
2. SPECIALITY:
   - 2.1 Rated current:0.5A
   - 2.2 Rated voltage:30V
   - 2.3 Contact Resistance:50mΩ MAX
   - 2.4 Insulation Resistance:100MΩ MIN 100V DC
   - 2.5 Dielectric withstanding voltage: 100V AC.
   - 2.6 Solder ability:235±5??5±0.5s.
   - 2.7 Durability:5000 Cycles Min.
   - 2.8 Operating condition:Temperature: -30??+80?? Humidity: 80% R.H MAX

PRODUCT NO.

BT42-04 C B 03-00

① ② ③ ④

PRODUCT SERIES:

① BT42: BATTERY CONNECTOR

② PIN NO.:
04: 4PIN

③ MATERIAL:
C: LCP

④ SERIES NO.:
00:

CUSTOMER DRAWING	YTCONN http://www.hnytconn.com	Dongguan YTCONN Electronics Technology Co., Ltd.		
GENERAL TOLERANCE X. .X ±0.20 .XX ±0.15 .XXX ±0.10	DRAWING	DEYI	TITLE:	BATTERY 1.2H 1.6MM PITCH DOUBLE ROW CONNECTOR
	APPROVED		P/N:	BT42-04CB03-00
ANGEL TOLERANCE X. ±3° .XX ±2° .XXX ±1°	DATE	2016.03.25	DRAWING NO.	C-BT42-00
	UNIT mm	SCALE 1:1	SIZE A4	SHEET 1of1 REV A